eTec

EFFICIENT DEDUSTING SOLUTION
SEGMENTABLE **STAINLESS STEEL** TABLET DEDUSTER
WITH **METAL DETECTOR**

PHARMA TECHNOLOGY

eTec 500CE

The eTec range is a tablet deduster based on a segmented 316L stainless steel spiral, offering a high degree of robustness.

The cover is fully transparent and provides a direct view to tablets throughout the process.

This unit uses enlarged circumferential dust extraction channels and central air jets on the tablets, immediately separating any powder excess during the dedusting process.

It only takes seconds to convey the tablets to the deduster outlet and provide excellent dedusting efficiency.

Utmost care has been taken to simplify the design in order to reduce the amount of parts to be assembled and disassembled, and to eliminate the need for tooling.

316L Stainless steel spiral

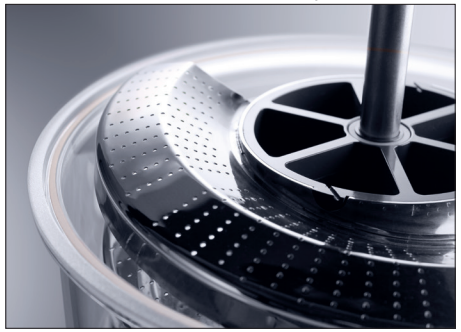

Optionnal 2 ways diverter

- Suitable for most high-speed tablet presses
- cGMP compliance
- Patented dust extraction solution
- Fast cleaning, easy validation
- Easy to maintain
- Small footprint

Technical data :	eTec 250 CE Ceia THS/PH21 EE	eTec 250 Li Lock Insight	eTec 500 CE Ceia THS/PH21 EE	eTec 500 Li Lock Insight
Total height (A)	1265 mm - 1355 mm	1265 mm - 1355 mm	1542 mm - 1632 mm	1542 mm - 1632 mm
Inlet height (B)	732 mm - 822 mm	732 mm - 822 mm	732 mm - 822 mm	732 mm - 822 mm
Outlet height (C)	700 mm - 790 mm	705 mm – 795 mm	982 mm – 1072 mm	985 mm – 1075 mm
Floor dimensions (DxE)	755 mm x 480 mm	755 mm x 480 mm	755 mm x 480 mm	755 mm x 480 mm
Inlet chute dimensions	ISO DN 50 Flex Connect ©	ISO DN 50 Flex Connect ©	ISO DN 50 Flex Connect ©	ISO DN 50 Flex Connect ©
Outlet chute	TC ISO 1127 DN 50	TC ISO 1127 DN 50	TC ISO 1127 DN 50	TC ISO 1127 DN 50
Packaging	Box on 1 US pallet	Box on 1 US pallet	Box on 1 US pallet	Box on 1 US pallet
Netto weight	198 Kg	198 Kg	208 Kg	208 Kg
Brutto weight	218 Kg	218 Kg	228 Kg	228 Kg

PHARMA TECHNOLOGY

Technical data for all units:	eTec
Minimum product size	Ø 4 mm
Maximum product size	Ø 25 mm
Conveying adjustment	Frequency / Voltage
Self emptying	Yes (without aspiration)
Requested air extraction	150 to 200 m³/h pressure drop 1500 to 2000Pa
Dust extraction connection	TC ISO 1127 DN 50
Requested compressed air	Min. 5 bar
Compressed air connection	QS6
Noise level (without product)	≤68 dB (A)
Power supply	110V / 230V
Frequency	50 Hz / 60 Hz
Polymer contact parts	FDA Tritan MX 711
Contact parts finishing	RA < 0,5 µm
Frame parts	Stainless steel 304
Frame finishing	Brushed 320
Frame mounted on wheels	Yes
IQ-OQ protocol	Available
Material certificates	Available

Metal detector	Ceia THS/PH21 EE	Lock Insight
Head opening	100 x 40 mm	98 x 35 mm
Accuracy stainless steel	Ø 0,50 mm	Ø 0,50 mm
Accuracy non-ferro	Ø 0,35 mm	Ø 0,35 mm
Accuracy ferro	Ø 0,30 mm	Ø 0,30 mm

Capacity / Speed exemples :	
Round tablets Ø 6 mm x 3 mm	1 900 000 tabs/H
Round tablets Ø 8 x 3,5 mm	600 000 tabs/H
Round tablets Ø 13 x 4 mm	290 000 tabs/H
Shaped tablets 15 x 8 x 5 mm	300 000 tabs/H
Shaped tablets 21 x 10 x 7 mm	140.000 tabs/H

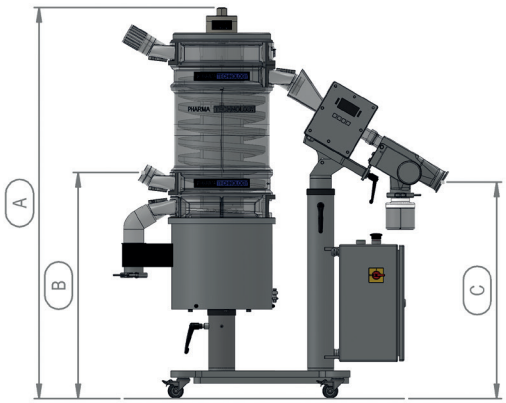

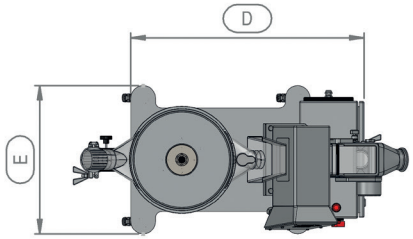

PHARMA TECHNOLOGY

Rue Graham Bell 8
B-1402 Thines (Nivelles)
Belgium
Tel: +32 67 70 13 00
E-Mail: info@pharmatec.be - Web site: www.pharmatec.be